SCHEMATIC DIAGRAM

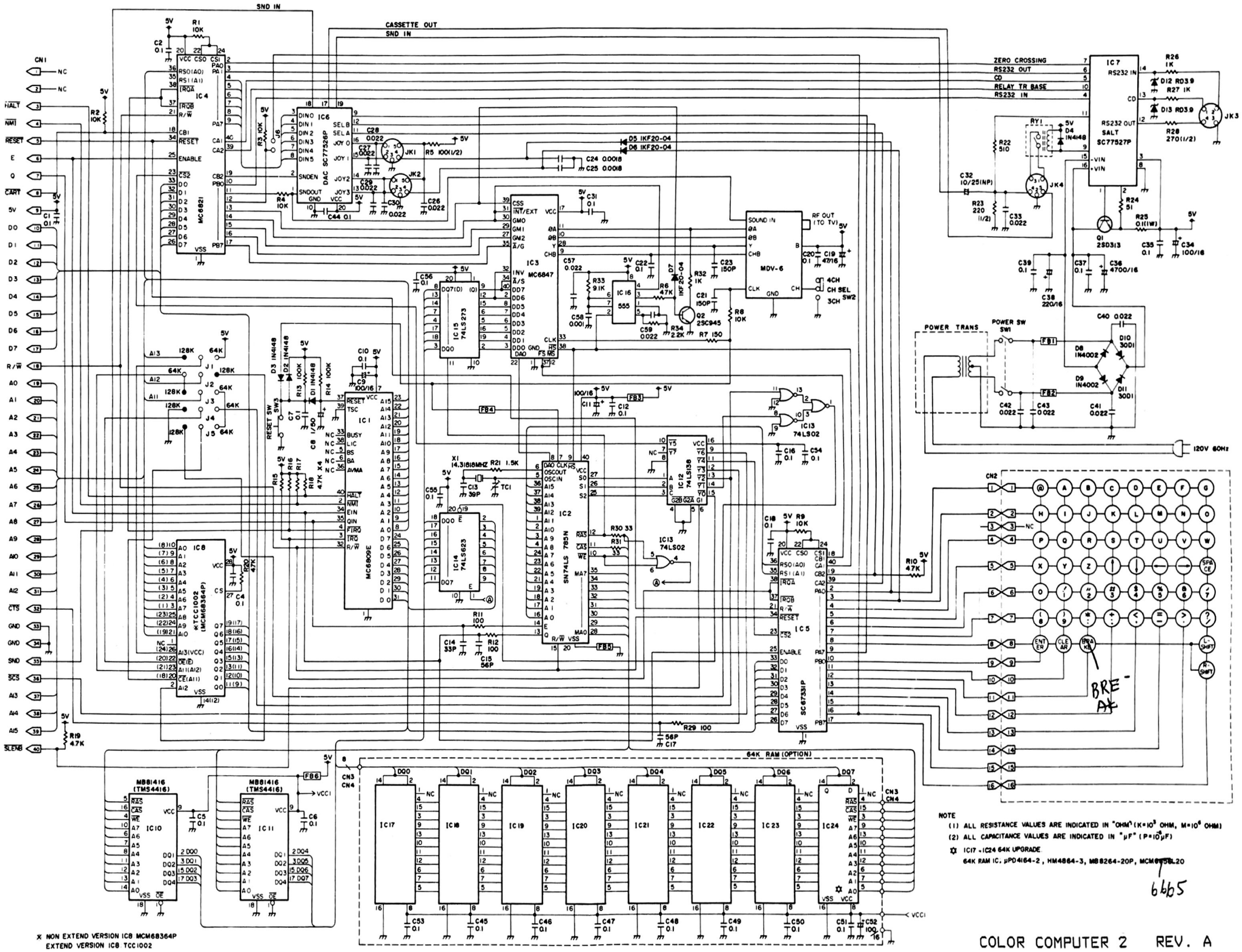

NOTE
(1) ALL RESISTANCE VALUES ARE INDICATED IN "OHM" (K=10^3 OHM, M=10^6 OHM)
(2) ALL CAPACITANCE VALUES ARE INDICATED IN "μF" (P=10^{-6}μF)
✡ IC17 - IC24 64K UPGRADE
64K RAM IC. μPD4164-2, HM4864-3, MB8264-20P, MCM6665L20

6665

X NON EXTEND VERSION IC8 MCM68364P
EXTEND VERSION IC8 TCC1002

COLOR COMPUTER 2 REV. A